For reprint orders, please contact reprints@expert-reviews.com

Expert Reviews

Temporal characteristics of botulinum neurotoxin therapy

Expert Rev. Neurother. 10(1), 93–103 (2010)

Frank J Lebeda†, Regina Z Cer, Robert M Stephens and Uma Mudunuri

†*Author for correspondence*
Combat Casualty Care Research Program, US Army Medical Research and Materiel Command, 504 Scott Street, Ft Detrick, MD 21702-5012, USA
Tel.: +1 301 619 7569
Fax: +1 301 619 7067
frank.lebeda@amedd.army.mil

Botulinum neurotoxin is a pharmaceutical treatment used for an increasing number of neurological and non-neurological indications, symptoms and diseases. Despite the wealth of clinical reports that involve the timing of the therapeutic effects of this toxin, few studies have attempted to integrate these data into unified models. Secondary reactions have also been examined including the development of adverse events, resistance to repeated applications, and nerve terminal sprouting. Our primary intent for conducting this review was to gather relevant pharmacodynamic data from suitable biomedical literature regarding botulinum neurotoxins via the use of automated data-mining techniques. We envision that mathematical models will ultimately be of value to those who are healthcare decision makers and providers, as well as clinical and basic researchers. Furthermore, we hypothesize that the combination of this computer-intensive approach with mathematical modeling will predict the percentage of patients who will favorably or adversely respond to this treatment and thus will eventually assist in developing the increasingly important area of personalized medicine.

Keywords: antigenicity • decay • diffusion • duration • immunogenicity • onset • persistence • spread • waning

Since the clinical introduction and commercialization of the botulinum neurotoxin in the 1980s, it has been transformed from an esoteric poison known mostly to academics and epidemiologists, to a well-known product to the general public. Botulinum toxin has become an important alternative to other pharmacological and surgical procedures in the treatment of a variety of neurological and non-neurological diseases, symptoms and other conditions. For example, serotype A toxin is used in a variety of dystonias [1], has beneficial effects in treating hyperhidrosis and is becoming a widely studied treatment for different types of pain. Perhaps most widely known is this toxin's use in cosmetic applications for the reduction of facial wrinkles (glabellar rhytids).

A knowledge of the underlying rates of reaction that are associated with this toxin's mechanism of action [2–5], along with computational models, will eventually provide a quantitative foundation for predicting the timing of the therapeutic benefits and avoiding the undesired effects of this treatment. Indeed, the temporal characteristics of the onset reaction induced by the type A neurotoxin (BoNT/A) have been simulated using a minimal model (Figure 1) [6,7] that was constructed using experimental data from isolated nerve-muscle preparations [6]. This minimal model was the starting point for the present study.

The more traditional physiologically based models (Figure 2) are typically associated with *in vivo* studies that determine the rates of absorption, distribution, metabolism and excretion (ADME) of low-molecular-weight compounds. By contrast, critical roles are played by the binding of the neurotoxin to nerve terminals, the internalization of the light chain and its subsequent proteolytic enzyme activity upon selected substrates involved in evoked, vesicle-mediated neurotransmission. The lack of relevance of ADME criteria also apply to low doses of focally applied therapeutic agents, such as botulinum toxin. Owing to the small amounts of toxins that are administered, not all of these processes can be determined *in vivo* with current detection assays [8]. This technical limit suggests that *in situ*, cell-free and other *in vitro* assays need to be exploited further, along with modifying typical ADME computational models to complement experimental and clinical findings. While the resulting differential equations from the minimal model can be solved with analytic expressions, those of the ADME and other complex formulations are more practically solved using numerical techniques.

The clinically observed effects of type A, and to a lesser extent, type B botulinum toxin are still at an early stage of understanding. The fact

 10.1586/ERN.09.134 ISSN 1473-7175

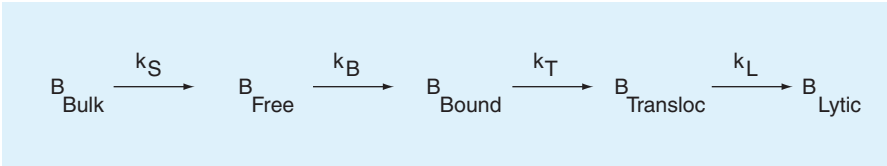

Figure 1. A minimal model for the actions of botulinum neurotoxin A (BoNT/A). Each compartment represents a species of BoNT/A molecule, for example, the bulk amount in solution distal to its receptors, free in solution proximal to its receptors, bound to receptor, undergoing internalization and translocation, and, ultimately, exerting its proteolytic effect. The rate constants shown determine the unidirectional interconversions among these species.
Based on previously published experimental data and kinetic models [6,7].

that we are only in a nascent stage is supported by recent articles that have evaluated, using evidenced-based research criteria, studies on the efficacy of this toxin in treating specific diseases and conditions [9–11]. From our previous studies we also noted that while there are many clinical papers dealing with the use of botulinum toxin for variety of diseases and conditions [6,12], only some of these are devoted to conducting kinetic analyses. Fewer references provide sufficient information to construct even partial models for the mechanism of action of the neurotoxin. We have, therefore, chosen to summarize a few of the more detailed clinical studies that have advanced our understanding of the time course of the therapeutic and the indirect actions of this neurotoxin family.

A note on nomenclature

The seven serotypes of neurotoxin (A–G) produced by various clostridial species are in molecular complexes that contain a nontoxic nonhemagglutinating protein and one or more hemagglutinins [13,14]. These neurotoxin-associated proteins are not considered toxic and probably serve as stabilizers for the neurotoxin [15]. Most commercial preparations at this time are not pure neurotoxins, but rather, the toxin is noncovalently bound within this molecular complex.

The expanding list of registered and registered trademark names for commercialized toxin preparations also represents another potential source of confusion with regard to nomenclature [8,16–20]. In collaboration with other organizations, the US FDA has assigned new nonproprietary generic names for the commercial formulations of these toxins [101]. Specifically BOTOX® (Allergan, CA, USA) was botulinum toxin type A and is now termed onabotulinumtoxinA. DYSPORT™ (Ipsen, UK) is now termed abobotulinumtoxinA. MYOBLOC®/ NeuroBloc® (Solstice Neuroscience, Inc., PA, USA; Eisai Ltd., UK) was botulinum toxin type B and is now rimabotulinumtoxinB [102]. These generic names were changed to emphasize the different potencies of these distinct products and the noninterchangeable unit dosages [101].

This diverse array of abbreviations and registered trademark names for the toxin complex and the neurotoxin molecule may not present a problem for a specialist, but may cause some confusion for the general reader [21]. To avoid this potential for ambiguity, we will use the word 'toxin' when referring to a molecular complex or an uncharacterized commercial preparation and a common abbreviation, BoNT, when referring to the neurotoxin [22].

Information retrieval & reduction methods

Biomedical literature for pharmacodynamic and pharmacokinetic references pertaining to botulinum toxin was searched using a subset of MEDLINE/PubMed® that is archived in a database within the specialized resource, BotDB [23,24,102]. The literature database is stored in Oracle XML DB® in an object-relational schema. The web server tool in BotDB (botXminer; [12]) was used to search for these selected citations using the 'search', 'group articles' or 'batch' options. A separate set of 52 keywords and phrases was derived from a list of diseases, symptoms and conditions that are currently being treated with this toxin [25]. Further reductions were made by using temporally related terms, such as onset and duration [26]. Other terms included resistance, neuronal sprouting, spread and diffusion.

Information retrieved

Based on the more than 20,000 citations contained in BotDB appearing from 1980 to June 2009, approximately 4600 citations were returned that contained at least one of the 52 disease, symptom or condition terms. To illustrate some of the output, the top ten terms were tabulated (Table 1) along with the number of authors and the journals in which the articles appeared. A similar search using 19 time-related words returned almost 5000 citations that had at least one of these terms. When these last two searches were combined, approximately 1100 citations were found that contained at least one disease-related and at least one time-related term.

Further searches for temporal terms found several highly relevant papers. One of these contained an account for the time to maximum effect in two different control studies. One measured the amplitude of the compound muscle action potential [26]. Another used the extent of hyperhidrosis as an area measured on the skin surface [27]. An additional metric found to be commonly used was the number of responders to the therapeutic effects of the toxin. These and other key papers are considered in detail.

Time-dependent variables used in kinetic models

In this section we describe the kinetic variables that are important in obtaining dose-dependent data for calculating the potencies and efficacies when comparing different formulations, serotypes and subtypes of these toxins. Measurements with varying doses, in some cases cannot be readily performed with patients, but could be done with volunteers and appropriate laboratory animal experiments. Some of the data analyzed in this study were gathered from three different references and were fitted to a hyperbola using SigmaPlot (version 9.01, 2004, Systat Software, Inc., Chicago, IL, USA).

Sources of error in creating kinetic models

Calculating the amount of enzymatically active clostridial neurotoxin is a major source of error in quantitative studies of this molecule. This problem is, in part, responsible for the lack of standardized International Units for any of the serotypes. Furthermore, making comparisons of the potencies and efficacies of different toxin formulations can potentially be a safety hazard. As stated in the package insert for BOTOX Cosmetic "Due to specific details of this assay such as the vehicle, dilution scheme and laboratory protocols for the various mouse median lethal dose (LD_{50}) assays, units of biological activity … cannot be compared to, nor converted into, units of any other botulinum toxin or any toxin assessed with any other specific assay method" [103]. When the term unit is mentioned in the present text, it is solely used for describing the administered dose of that particular toxin formulation.

Related to this problem is the unknown stoichiometry of the molecular complexes that include the neurotoxin and the non-toxic proteins that are produced by the micro-organisms. Although stoichiometric estimates have been made for the largest type A toxin complex [28], more precise results are expected when the entire complex is crystallographically resolved. An additional problem is that, as yet, no pharmaceutical product has been extensively characterized by mass spectrometry [13,14] or by other analytical methods and published in the open literature.

As different methods are used to localize injections of toxins in clinical studies, some variability in the responses is to be expected. Some studies do not provide sufficient details in describing how these injections were performed, thus leading to more uncertainty regarding precisely where the toxins are delivered. Although presently lacking, heterogeneous sources of clinical data are needed from those studies that focus on a single disease.

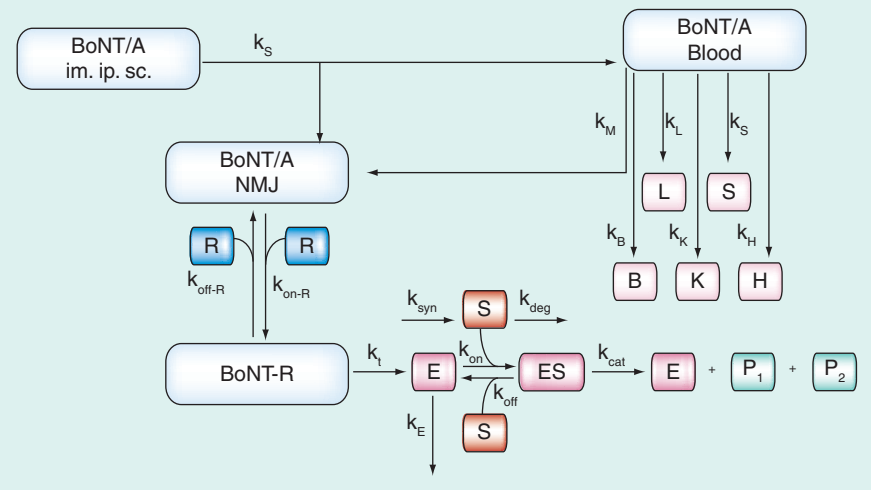

Figure 2. Framework for a physiologically based model. Based on the minimal model in Figure 1, more details have been included to account for the amount of BoNT in the blood, and its distribution to organs where it is eliminated. BoNT/A is distributed to its targets such as the cholinergic terminals at the NMJ. The traditional ADME model has been expanded to include the multistep molecular processes involved in the toxin mechanism of reaction. At these sites, BoNT/A binds to its receptors, becomes internalized, and undergoes low-pH dependent translocation from an intracellular vesicular compartment into the neuroplasm. Inside the neuron, BoNT/A enzymatically cleaves its substrate SNAP-25. The amount of uncleaved substrate remaining is a function of tension that can be developed by the muscles (not shown). The substrate itself is synthesized and degraded. The toxin is eliminated by as yet unknown mechanisms. ADME: Absorption, distribution, metabolism and excretion; BoNT/A: Botulinum neurotoxin A; im: Intramuscular; ip.: Intraperitoneal; NMJ: Neuromuscular junction; sc.: Subcutaneous; SNAP-25: Synaptosomal-associated protein of 25 kDa.

Onset times of therapeutic effect

Some researchers occasionally use the latency to first signs of relief from symptoms as a metric for onset time [29]. For the reduction of glabellar lines with 50 U of type A toxin (Reloxin®, Medicis Pharmaceutical Corp, AZ, USA), mean onset times for healthy adults ranged from 2 to 3 days [30]. These onset values appeared to remain within this range even in individuals who received up to six applications. A concern regarding this latter study is that it appears to be designed as a subjective self-assessment by the patient and that accurate onset times may not be obtained. Indeed, the authors state that "many patients had truncated duration assessment(s)".

In another study, doses of approximately 150 U produced onset times in cervical dystonia (CD) patients that were generally less than 10 days with an unspecified formulation of type A toxin [31]. Mean latency times from injection to the first significant improvement were approximately 6 days and were associated with patients with CD, blepharopasm and hemifacial spasm [32]. Type A toxin was used in a range of low doses of 25, 50 and 185 U. It was noted that the toxin used in this study was not based on a commercially available botulinum toxin product, but rather a product that had been modified by the addition of saline and human serum albumin.

The time needed to attain the maximum therapeutic effect is a more commonly measured variable for onset or latency. For BoNT/A administrations the values ranged from 3 to 30 days. Onset times of approximately 7 days were observed in dystonia patients [32]. As noted with essential hand tremor onset times were within a 2-week period using 50 U of BOTOX [33]. The average onset time to the maximum reduction of compound muscle action potential amplitudes from extensor digitorum brevis muscles in healthy volunteers was approximately 7 days with intramuscular administered 4 U of BOTOX.

By contrast, in a study designed to assess the effect of subcutaneous administration of various dilutions of BOTOX (4 U) and DYSPORT (12 U) on normal sweating mechanisms in healthy subjects it took up to 22 days to observe maximum effects [27]. Although these peak times are evident in Figure 3 of that paper,

Table 1. Top ten rank-ordered results for selected citation and kinetic terms that are associated with a disease or symptom.

Disease/ symptom*	Articles (n)	Authors (n)	Journals (n)	Onset or latency (n)	Duration or persistence (n)
Pain	1044	3100	450	96	123
Dystonia	890	2035	283	47	143
Spasticity	608	1665	238	21	55
Strain	580	1758	210	4	11
Spasm	525	1492	272	45	102
Blepharospasm	449	1113	200	29	80
Hemifacial spasm	308	849	156	24	62
Hyperhidrosis	304	608	124	5	32
Headache	267	599	134	8	35
Achalasia	260	778	120	5	29

*A total of 52 query terms for during the year 1980 to the present were submitted to the batch option of botXminer during June–July, 2009. Citation and kinetic terms were added to the query for the top ten ranked diseases or symptoms.

the large error bars suggest that the entire time course of these observed effects may not have been accurately assessed, thus making the estimates of onset times less certain.

A similar range of 3–30 days with BOTOX was observed in a small population (n = 14) of control subjects (Figure 3) [26]. While the possible causes of such variability is discussed in a subsequent section, this range of times to onset can be readily simulated with minimal kinetic models (Figure 1) [6] without associating the observed variability to any specific mechanistic cause. More importantly, to determine whether the time to onset is dose dependent, it will be essential to design and execute studies to accurately quantify this relation.

Interestingly, there is some indication that type B (MYOBLOC) is faster in onset than type A toxin (BOTOX and DYSPORT) 48 h versus 3–7 days for rhytid reduction [20,34]. Similarly, the longer effective durations reported with the patients receiving the type B toxin were also suggested to be related to faster times to onset [35], a hypothesized relation that requires further study. However, in direct comparisons of BOTOX and MYOBLOC [36], type A produced significantly longer therapeutic effects in CD patients than type B toxin. A similar difference has also been demonstrated in preclinical experiments [37].

As noted in the 'Sources of error' section, caution must be applied regarding the uncertainties in defining units for different formulations. From the work of Aoki, the mouse intramuscular LD_{50} for BOTOX was 81.4 ± 3.5 U/kg, while the LD_{50} for MYOBLOC was 104.6 ± U/kg [37]. It is assumed that the units are different and specifically refer to each of these products. More importantly, the essential values are the effective dose (for 50% of the test population; ED_{50}) values that are related to the responses being elicited from the injected muscles. Care must also be applied to ensure that onset times in clinical trials are a reflection of the trial design rather than an intrinsic property of the manufactured products. Therefore, unless onset times are specifically designed to be part of the study, it will be difficult to draw relevant conclusions.

In the presence of BoNT/A, the time to paralysis becomes shorter as the frequency of nerve stimulation increases in the isolated neuromuscular junction (NMJ) preparation [7]; that is to say, the faster the rate of nerve stimulation, the faster the onset of maximum paralysis. This faster approach to complete paralysis was empirically simulated by increasing the value of the final rate constant in the minimal model [6]. One possibility for the toxin acting faster may be the increased fusion of synaptic vesicles with the inner leaflet of the bilayer membrane within the presynaptic terminals, thus resulting in the exposure of more synaptic vesicle glycoprotein2/ganglioside binding sites for the toxin [38]. One could predict that due to the hyperactive state of the affected nerves and muscles in dystonia, that BoNT/A will act faster than in the corresponding tissues of healthy individuals. Indeed, Hallett's group demonstrated this with BOTOX in cases of writer's cramp [39]. It should be stressed that there may be other differences in physiology between the normal muscles of human volunteers and dystonic or spastic muscles. For example, if significant differences occur in muscle pH, the kinetics of BoNT uptake may be influenced.

Duration & persistence of BoNT effectiveness

The predicted duration of the effectiveness of BoNT is dependent on its rate of clearance from the circulatory system and the elimination rate of the functional L chain from the nerve terminals. The time for the resynthesis of intact substrate (synaptosomal-associated protein [SNAP-25] for BoNT/A or synaptobrevin 2 for BoNT/B) is another factor. These pharmacokinetic properties are as yet undetermined in humans. The type A toxin has a well-established therapeutic duration of weeks to months [40]. Evidence is also accumulating for some therapeutic effects of type A toxin that last for more than 1 year [41]. Similarly, the type C1 toxin was observed to be persistent in control subjects or experimental animal models [4,42,43]. By contrast, for type B, E and F toxins [44,45] the effects are much shorter.

It is likely that the durations of effectiveness are dependent on the dose administered. Patients receiving 154 U had durations for the total effective response of 11.6 ± 7.1 weeks [31]. In the previous cited study [32], administration of low doses resulted in an average duration of approximately 12 weeks for the relief of symptoms. Using a higher dose (500 U type A, DYSPORT) involving 38 CD patients, a mean effective duration of 22.8 weeks (± 12.5 standard deviation) with a range of 9–46 weeks was observed. It is possible that mean duration values varied with the intensity of disease, the muscle or muscles affected by the therapy or the

commercial preparation used. A more uniform study design in which the different toxin preparations are directly compared is obviously required.

Other data for the duration of effectiveness have been published. In a random, double-blinded study involving CD patients, types A (BOTOX®) and B toxin (MYOBLOC®) produced similar durations of effectiveness of 14 and 12 weeks, respectively [36]. This small difference was statistically significant (type A: 14 weeks vs type B: 12.1 weeks; $p = 0.033$).

In oculofacial treatments for functional improvements and cosmetic applications, type B toxin (MYOBLOC/NeuroBloc™) has been reported to have a 2-week shorter duration of action than a type A toxin (BOTOX and DYSPORT®) [20,46]. In contrast to type A toxin, larger doses of type B toxin seem to be required to achieve maximum clinical effects. There are suggestive trends of dose-dependent durations of effect with type B (MYOBLOC) in dermatologic procedures (Table 2) [47]. Using these data, we have performed nonlinear regression calculations to provide an initial estimate of 542 U for the half-maximal effective dose (ED_{50}) of type B toxin. As doses from 1750 to 3000 U produced similar durations (Figure 4), administration of the lower doses may be sufficient to produce overall optimal therapeutic results. The calculated value for the ED_{50} is an estimated upper limit and that with additional low-dose data, smaller values for the estimated ED_{50} may result.

Time of decay (waning) of the therapeutic effect of BoNT

Reductions in the therapeutic effects of the toxin have been extensively reported in the clinical literature yet no detailed calculations have thus far been performed. Taking results from the previously cited glabellar line reduction study using a type A toxin (Reloxin) [30], the half-maximum response time was approximately 90 days. Both investigator and patient assessments were used for the observations of effective treatment duration. As noted earlier for the times to first response, in this study the analysis of the duration of effective treatment for patients was truncated to three visits, even though some patients had up to five visits. Variability among patient responses, as discussed in a later section, may also be an important factor that could affect estimates of effective treatment durations.

The percentage of responders to therapeutic treatment is related more to a population response rather than representing a reductionist model for a physiological or biochemical process. Nevertheless, percentages are frequently used as metrics of successful treatment and serve as valuable end points for various time-course analyses. The decay process may be a rate-limiting step if the rate of replenishment of a toxin's substrate is faster than the decay process. A degradation of the L chain of BoNT may be a candidate process whose molecular mechanism is presently undetermined. Alternatively, one of the cleaved portions of the substrate may create an incompetent molecular complex with the other soluble NSF attachment protein receptor (SNARE) proteins that, in turn, prevents the release of neurotransmitter. This type of process is supported by the results from experiments that examined the long-lasting decay of BoNT/A-induced effects and the behavior of the cleavage products of SNAP-25 [43].

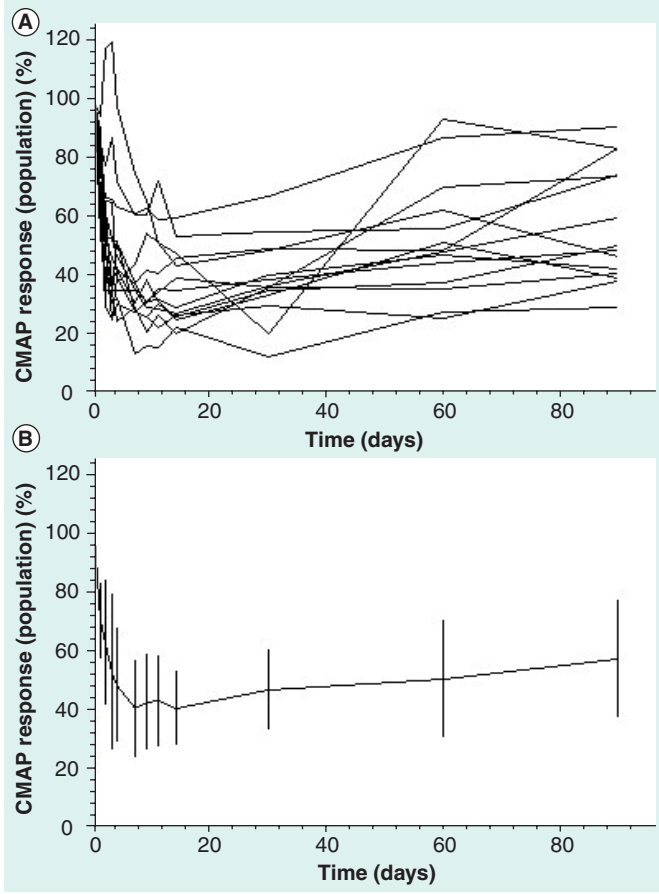

Figure 3. Variability in compound muscle action potential responses from healthy volunteers injected with BOTOX in the extensor digitorum brevis muscle. (A) Superimposed responses from 14 subjects following injection of 4 U on day 0. **(B)** Calculated average values with a measure of variability (bars represent standard error).
Data from [26].

Other temporal effects of BoNT

Resistance to BoNT

An important temporal characteristic of toxin treatment in which mathematical models could be of benefit is the development of resistance or therapeutic failure. More accurately termed 'secondary therapeutic failure', this observation represents an initial therapeutic effect followed by a loss of responsiveness with repeated toxin administrations [48]. More complex models are envisioned to simulate the time course of the development of resistance after repeated injections. This response is clearly more involved than the model depicted in Figure 2.

A reduction in the duration of type A toxin effectiveness can apparently occur in patients as early as the second treatment application [40], while other patients exhibit more gradual reductions after subsequent applications [49]. In these studies, the variability of a patient's subjective assessment of therapeutic

Table 2. Onset and duration of effects of type B toxin (MYOBLOC®) on glabellar rhytids.

Dose type B toxin (U)	Onset ± SD (days)	Duration ± SD (weeks)	Patients (n)	Ref.
1000		8–10	4	[74]
1800	1.6 ± 0.6	8.3 ± 1.5	30	[35]
2000		10–12	4	[74]
2400	2.1 ± 0.7	9.6 ± 0.7	16	[75]
3000	1.9 ± 0.5	10.4 ± 1.4	18	[75]

SD: Standard deviation; U: Units of MYOBLOC.

benefits provided by the toxin may also contribute to the variation in the time for the development of resistance. It is important to note that much of the earlier literature used the original formulation of BOTOX [40,49]. More recent research demonstrates that the presence of antibodies with the current BOTOX formulation is quite uncommon [50]. Presently, neither the manufacturers of DYSPORT nor MYOBLOC have published their results.

The frequency of occurrence seems to be serotype dependent, with more resistance apparently occurring with type B than with type A toxin [42]. Specific information on the rate of the development of immunogenicity to type B has been published [51], whereas the manufacturer has not, as yet, published the data from the original clinical trials. This difference may be attributed to several factors. Larger doses are required for type B toxin (NeuroBloc) to achieve effects comparable with those obtained with BOTOX [52]. There are also reports that type B toxin may have a higher antigenicity than type A [15,53].

The latency from the first injection of type A toxin (BOTOX or DYSPORT) to complete secondary therapeutic failure was determined in one study to have an average value of 694 ± 519 (standard deviation) days in 27 patients with dystonic syndromes [54]. Of interest is that the distribution of these failure times was bimodal. Two groups of patients had average latency values of 324 and 1155 days, respectively, with a wide range between 61 and 2341 days [54].

The postulated relationship between the progressive development of resistance to type A toxin and the presence of neutralizing antibodies has been critiqued in that it is still an unresolved issue [48]. In marshalling his arguments, work is cited by Guyer regarding responsive patients who have circulating antibodies whereas there are reports of resistant patients who do not have detectable antibodies against BoNT/A. It is also argued that "the vast majority of treatment failures are seen in the management of cervical dystonia" [48]. Moreover, a progressive loss of effect can also follow surgical sectioning. This reversal of therapeutic effects may represent secondary compensatory mechanisms associated with the proximal musculature [55]. Presumably, this mechanism would involve hyperactive muscles near the injection site(s). The secondary effect could be related to the hypertrophy of these surrounding muscles that would allow them to functionally compensate for the loss of the affected muscles. This compensatory reaction may have features in common with the well-known muscle hypertrophy observed with the reduction or loss of activity following tenotomy of synergists [56] or with the hypertrophic fibers that have been observed in dystrophic muscles [47,48].

Clearly, there is a need for the further development of sensitive assays that are specific for neutralizing BoNT/A antibody molecules (not merely the mouse lethality assay) and compare their time course of appearance to the development of resistance to directly resolve this issue.

There is compelling evidence for a relatively low rate of an antibody response to the current BOTOX formulation [59]. More clinically relevant assays for responsiveness are the frontalis type A test or the unilateral brow injection [31,36,50], which should provide a more meaningful assessment of clinical responsiveness.

Time course of neuronal sprouting

The temporal sequence of physiological events during the recovery from paralysis induced by BoNT/A has lately acquired a change in perspective. It has been a widely held view that toxin-induced neuronal sprouts initiate the process of recovery from BoNT/A's chemo-denervating effects. This concept has been reinforced by the elegant histological measurements with a fluorescent dye in which uptake of the dye indicated vesicle recycling and, indirectly, provided evidence for the reappearance of vesicle-mediated release of neurotransmitter [60].

On the other hand, this scheme has not been subject to direct functional verification until the study by Slater and coworkers [61]. Their highly sensitive electrophysiological recordings have shown that during all stages of recovery from exposure to BoNT/A, the region of the original NMJ released significantly more quanta than the newly formed termini. From these new results, the functional role of sprouting during this neurotoxin's waning period requires further examination.

Diffusion & spread of BoNT/A

For this section, 'diffusion' will be operationally defined as the local, intramuscular movement of the BoNT molecule, for example, as it traverses within a nerve terminal or between muscle fibers. Diffusion of BoNT also describes its movement across the layers of fibrous connective tissue (deep or investing fascia) that surround muscles (epimycium), the finer tissue around small bundles (fascicles) of muscle fibers (perimycium) [62], and the network of reticular tissue (endomycium), which includes blood capillaries, between single muscle fibers.

The term 'spread' will be operationally defined as the systemic movement to other distal sites [16]. The latter is usually associated with adverse events (AEs). On the other hand, spread has also been characterized as a desired effect so that, for example, allowing the physician to "use fewer U (of toxin) in areas such as the frontalis muscle" [55]. Controversies exist based on the extent of diffusion within a muscle and the spread to distal muscles via the circulatory and lymphatic systems which is dependent on a variety of factors including "dose, concentration, injectate volume, number of injections, site, rate (and depth) of injection, needle gauge, muscle size, muscular fascia, distance of needle

tip from the neuromuscular junction, and protein content of the BoNT formulation" [25]. Many publications (157 PubMed citations for spread; 147 for diffusion) have been devoted to monitoring the desired or undesired movement of BoNT/A or other serotypes subsequent to different injection routes. A variety of techniques have been used ranging from directly tracking ^{125}I-BoNT/A [63] to the indirect histological observations of glycogen depletion in muscle fibers [64].

One measure of spreading activity relates to the appearance of AEs, such as the systemic anticholinergic side effect of dry mouth that has been reported for some patients treated with type B toxin (NeuroBloc/MYOBLOC) for cervical dystonia [53]. In this study the duration of this AE in eight out of 12 patients was 3.1 weeks (± 2.2, undefined error metric) after a single injection of type B toxin. This duration was much shorter than the average interinjection interval used in this study (~100 days).

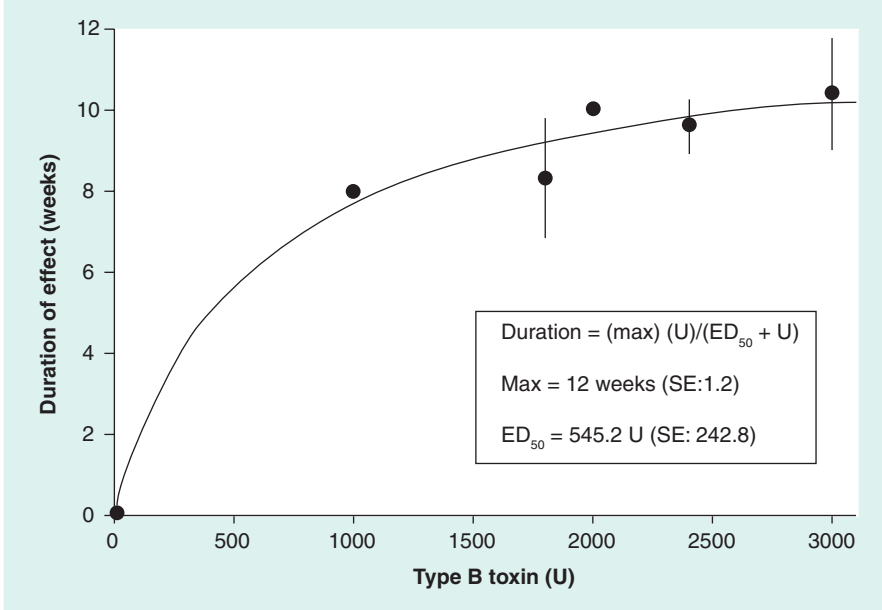

Figure 4. Relationship between the administered doses of type B toxin (MYOBLOC®) and the resulting duration of effect in patients with glabellar rhytids. Data were least-squares fit to a hyperbolic function: percentage duration: [(max duration) (U)]/(ED_{50} + U).
SE: Standard error; U: Units of MYOBLOC.
Data from [35,74,75].

Relationship between the extent of substrate cleavage & paralysis

Several studies indicate, at least for the A serotype, that this relation is complex. From these data it is likely that a highly nonlinear relationship exists between BoNT/A-induced substrate cleavage and the resultant loss of muscle tension [65–67]. Particularly intriguing is the observation that only a low amount of substrate cleavage (<10%) is associated with total paralysis of rodent muscles. Such a relationship can be modeled by a logistic expression that produces a sigmoid [substrate]-muscle tension plot. A steepness factor, analogous to a Hill slope, would have a value that is much greater than one. Models could also be used to determine how the value of the midpoint of this curve (half-maximal substrate concentration) could be a critical parameter. In this case, small changes in the midpoint value would produce disproportionately large shifts in this curve. This sensitivity could also be a contributor, as discussed below, to the variability seen in healthy volunteers in their responses to BoNT/A.

Time course of AEs

The temporal description of unwanted effects can be exploited to add to our present understanding of the pharmacokinetic and pharmacodynamic actions of BoNT. Although such untoward effects may require the spread of the toxin to the termini of adjacent muscle groups, times to peak for some AEs have been shown to be comparable with those of the desired therapeutic actions. In one of the few placebo-controlled studies that has detailed kinetic information, Jankovic *et al.* observed times to peak of 2 weeks or less for the production of finger weakness when treating essential hand tremors [33]. Similar times to peak were found for several metrics of the therapeutic response, including the fine motor skills as measured by the composite score for drawing.

Variability of responses to BoNT/A

All of the rate constants used in a model could be used to account for most of the response variation observed. Focusing on the neuromuscular junction model, the list of variable rate constants would include the rates of reversible binding and dissociation of the neurotoxin and its ectoacceptors, the rate of internalization and translocation of the toxic moiety (presumably the light [L] chain), the rates of substrate binding and dissociation from the L chain, the enzymatic rate of substrate cleavage (k_{cat}), the rate of neurotoxin elimination, and the rates of substrate synthesis and degradation.

The amounts of molecular components could be defined in concentration terms but more practically, by the number of molecules associated with these reactions. To convert from concentrations to numbers of molecules, volumes of various structures such as the whole muscle, the muscle fibers and the nerve terminals, are required. Another list of variable amounts would include, at a minimum, values for BoNT, its ectoacceptor and the substrate. There would also have to be a quantitative relationship between the amount of substrate cleavage and the resultant loss of peak muscle-twitch tension. In a simple logistic model this would include at least two of the four parameters, one for the midpoint value and another number for quantifying the steepness of this relation. Moreover, the rate of translocation would comprise several other rates that are associated with low-pH reactions, for example, conformational changes in the neurotoxin 3D structure,

the insertion of the heavy (H) chains into the membrane of the internalized vesicle to form ion channels and the reduction of the disulfide bond that connects the L and the H chains of the neurotoxin [6]. From this undoubtedly incomplete list of variables it is evident that modeling clinical responses with *in silico* models is a daunting task that requires well-designed integrated sets of studies that systematically collect relevant kinetic and translational data (i.e., genomics, proteomics and metabolomics).

Different types of mathematical models could help us understand the causes for the variability of responses to BoNT/A that have been observed, as noted earlier, in the times to maximum effect in healthy subjects [26]. Of these, stochastic models could be useful in further characterizing the significant variables [68–70]. For stochastic analyses, an additional list of variables would be required to conduct these types of calculations, for example, the number of nerve termini when BoNT/A is injected into single muscles, volumes of presynaptic nerve termini, the volume of the muscle that includes the volume of the muscle fibers and the surrounding extracellular space. In addition, a stochastic approach could also be exploited to perform *in silico* experiments when laboratory or clinical tests are impractical.

Expert commentary

We are now at the threshold of integrating a spectrum of biomedical research studies to use bottom-up design approaches in developing physiologically based models. Combining basic and clinical research findings can then be used to better understand these processes by representing the body as a system of systems, ranging from biomolecules at lower levels to organelles, cells and organs at higher levels. Possible results from this quantitative approach may offer a better understanding of the dosage units and the different potencies of the various serotypes, their subtypes and commercial formulations of BoNT. It would be useful if authors included these pharmacologic data in their publications. By doing so, we hope to gain insights in predicting the durations of BoNT effectiveness associated with the treatments of dystonia and other disorders.

A major characteristic mentioned in this review is the variability in the responsiveness to treatment and susceptibility to AEs. Age, gender, ethnicity, diet, environment, indication and the study site or center are some of the more important variables that should be analyzed in the course of conducting evidence-based medicine [71]. There is a need to understand these 'heterogeneity in treatment effects' in response to the botulinum toxin and other pharmaceuticals in developing individualized treatments.

Five-year view

Within this period, traditional medicine will continue to develop procedures to help formulate personalized therapies. By using translational data it is expected that an individual's responses to pharmaceuticals will be predicted more accurately. As previously described, the ideal properties of a therapeutic neurotoxin product that could be customized for the patient would be those that maximize therapeutic potencies, optimize intervals between applications, and minimize AEs, resistance and financial costs [29]. It is noteworthy that kinetic analysis tools have been incorporated by the National Cancer Institute into their personalized cancer treatment initiative (caBIG) [72,73]. By using a similar integrated approach, it is anticipated that computational models and clinical research will complement each other to optimize benefits and minimize risks when using these toxin products.

Acknowledgements

The authors would like to thank the anonymous reviewers for their constructive critiques and insights that significantly contributed to this manuscript. Some of the references cited in this paper were obtained electronically from the National Library of Medicine, the Uniform Services University of the Health Sciences and the Sheridan Libraries at Johns Hopkins University.

Financial & competing interests disclosure

This work was supported by the Defense Threat Reduction Agency Joint Science and Technology Office-Chemical Biological Defense [project 3.10043–07-RD-B] to Frank J Lebeda; and by the National Cancer Institute, National Institutes of Health, under contract No. HHSN261200800001E. Opinions, interpretations, conclusions, and recommendations are those of the authors and are not necessarily endorsed by the US Army. The content of this publication does not necessarily reflect the views or policies of the Department of Health and Human Services. ***The authors have no other relevant affiliations or financial involvement with any organization or entity with a financial interest in or financial conflict with the subject matter or materials discussed in the manuscript apart from those disclosed.***

No writing assistance was utilized in the production of this manuscript.

Key issues

- Botulinum toxin is currently being used therapeutically for more than 50 diseases, symptoms and other conditions.
- More than 1000 articles exist that deal with some aspect of the timing of these effects.
- Despite the large amount of kinetic information, there is presently no unifying model for quantitatively describing the time course of these effects for any of the diseases or conditions currently being treated.
- Some of the more detailed studies are reviewed here that illustrate research designs that are needed for observing relevant kinetic data.
- A minimal computational model is described that can simulate the onset of therapeutic effects observed in experimental and in clinical studies.
- A more comprehensive model is outlined that enumerates the mechanistic steps involved in the pharmacodynamic and pharmacokinetic actions of this toxin.
- Such computational models are expected to help us gain a better understanding of the therapeutic actions of botulinum toxin and to provide information to complement research findings for developing personalized treatment strategies.

References

Papers of special note have been highlighted as:
• of interest
•• of considerable interest

1 Adam OR, Jankovic J. Treatment of dystonia. *Parkinsonism Relat. Disord.* 13(Suppl. 3), S362–S368 (2007).

2 Simpson LL. Identification of the major steps in botulinum toxin action. *Annu. Rev. Pharmacol. Toxicol.* 44, 167–193 (2004).

3 Schiavo G, Matteoli M, Montecucco C. Neurotoxins affecting neuroexocytosis. *Physiol. Rev.* 80, 717–766 (2000).

4 Morbiato L, Carli L, Johnson EA, Montecucco C, Molgo J, Rossetto O. Neuromuscular paralysis and recovery in mice injected with botulinum neurotoxins A and C. *Eur. J. Neurosci.* 25, 2697–2704 (2007).

5 Lawrence G, Wang J, Chion CK, Aoki KR, Dolly JO. Two protein trafficking processes at motor nerve endings unveiled by botulinum neurotoxin E. *J. Pharmacol. Exp. Ther.* 320, 410–418 (2007).

6 Lebeda FJ, Adler M, Erickson K, Chushak Y. Onset dynamics of type A botulinum neurotoxin-induced paralysis. *J. Pharmacokinet. Pharmacodyn.* 35, 251–267 (2008).

• **Detailed kinetic treatment and extension of Simpson's minimal kinetic model for botulinum neurotoxin A.**

7 Simpson LL. Kinetic studies on the interaction between botulinum toxin type A and the cholinergic neuromuscular junction. *J. Pharmacol. Exp. Ther.* 212, 16–21 (1980).

•• **Describes the original experimental observations that served as the foundation of the minimal model for botulinum neurotoxin A and the onset of paralysis at the neuromuscular junction.**

8 Sampaio C, Costa J, Ferreira JJ. Clinical comparability of marketed formulations of botulinum toxin. *Mov. Disord.* 19(Suppl. 8), S129–S136 (2004).

9 Naumann M, So Y, Argoff CE *et al.* Assessment: botulinum neurotoxin in the treatment of autonomic disorders and pain (an evidence-based review): report of the Therapeutics and Technology Assessment Subcommittee of the American Academy of Neurology. *Neurology* 70, 1707–1714 (2008).

10 Simpson DM, Blitzer A, Brashear A *et al.* Assessment: botulinum neurotoxin for the treatment of movement disorders (an evidence-based review): report of the Therapeutics and Technology Assessment Subcommittee of the American Academy of Neurology. *Neurology* 70, 1699–1706 (2008).

11 Simpson DM, Gracies JM, Graham HK *et al.* Assessment: botulinum neurotoxin for the treatment of spasticity (an evidence-based review): report of the Therapeutics and Technology Assessment Subcommittee of the American Academy of Neurology. *Neurology* 70, 1691–1698 (2008).

12 Mudunuri U, Stephens R, Bruining D, Liu D, Lebeda FJ. BotXminer: mining biomedical literature with a new web-based application. *Nucleic Acids Res.* 34, W748–W752 (2006).

13 Hines HB, Lebeda F, Hale M, Brueggemann EE. Characterization of botulinum progenitor toxins by mass spectrometry. *Appl. Environ. Microbiol.* 71, 4478–4486 (2005).

14 Barr JR, Moura H, Boyer AE *et al.* Botulinum neurotoxin detection and differentiation by mass spectrometry. *Emerg. Infect. Dis.* 11, 1578–1583 (2005).

15 Figgitt DP, Noble S. Botulinum toxin B: a review of its therapeutic potential in the management of cervical dystonia. *Drugs* 62, 705–722 (2002).

16 Molho E, Jankovic J, Lew M. Role of botulinum toxin in the treatment of cervical dystonia. *Neurol. Clin.* 26(Suppl. 1), 43–53 (2008).

17 Dressler D, Hallett M. Immunological aspects of Botox, Dysport and Myobloc/NeuroBloc. *Eur. J. Neurol.* 13(Suppl. 1), 11–15 (2006).

18 Carruthers A, Carruthers J. Botulinum toxin products overview. *Skin Therapy Lett.* 13, 1–4 (2008).

19 Hunt T, Clarke K. Potency of the botulinum toxin product CNBTX-A significantly exceeds labeled units in standard potency test. *J. Am. Acad. Dermatol.* 58, 517–518 (2008).

20 Taban M, Perry JD. Pearls of botox usage. *Oculoplastic Surgery* 4, 165–169 (2006).

21 Brin MF, Blitzer A. Botulinum toxin: dangerous terminology errors. *J. R. Soc. Med.* 86, 493–494 (1993).

22 Niemann H. Clostridial neurotoxins – proposal of a common nomenclature. *Toxicon* 30, 223–225 (1992).

23 Lebeda FJ. BotDB: a database resource for the clostridial neurotoxins. *Mov. Disord.* 19(Suppl. 8), S35–S41 (2004).

24 Cer RZ, Mudunuri U, Stephens R, Lebeda FJ. IC50-to-Ki: a web-based tool for converting IC50 to Ki values for inhibitors of enzyme activity and ligand binding. *Nucleic Acids Res.* 37, W441–W445 (2009).

25 Lim EC, Seet RC. Botulinum toxin: description of injection techniques and examination of controversies surrounding toxin diffusion. *Acta Neurol. Scand.* 117, 73–84 (2008).

26 Jost WH, Kohl A, Brinkmann S, Comes G. Efficacy and tolerability of a botulinum toxin type A free of complexing proteins (NT 201) compared with commercially available botulinum toxin type A (BOTOX) in healthy volunteers. *J. Neural Transm.* 112, 905–913 (2005).

•• **Important research contribution that highlights the interpersonal variability of compound muscle action potential responses following toxin administration.**

27 Kranz G, Haubenberger D, Voller B *et al.* Respective potencies of Botox and Dysport in a human skin model: a randomized, double-blind study. *Mov. Disord.* 24, 231–236 (2009).

28 Arndt JW, Gu J, Jaroszewski L *et al.* The structure of the neurotoxin-associated protein HA33/A from *Clostridium botulinum* suggests a reoccurring β-trefoil fold in the progenitor toxin complex. *J. Mol. Biol.* 346, 1083–1093 (2005).

29 Sheffield JK, Jankovic J. Botulinum toxin in the treatment of tremors, dystonias, sialorrhea and other symptoms associated with Parkinson's disease. *Expert Rev. Neurother.* 7(6), 637–647 (2007).

30 Moy R, Maas C, Monheit G, Huber MB. Long-term safety and efficacy of a new botulinum toxin type A in treating glabellar lines. *Arch. Facial Plast. Surg.* 11, 77–83 (2009).

31 Mejia NI, Vuong KD, Jankovic J. Long-term botulinum toxin efficacy, safety, and immunogenicity. *Mov. Disord.* 20, 592–597 (2005).

32 Mohammadi B, Kollewe K, Wegener M, Bigalke H, Dengler R. Experience with long-term treatment with albumin-supplemented botulinum toxin type A. *J. Neural. Transm.* 116, 437–441 (2009).

33 Jankovic J, Schwartz K, Clemence W, Aswad A, Mordaunt J. A randomized, double-blind, placebo-controlled study to evaluate botulinum toxin type A in essential hand tremor. *Mov. Disord.* 11, 250–256 (1996).

34 Matarasso SL. Comparison of botulinum toxin types A and B: a bilateral and double-blind randomized evaluation in the treatment of canthal rhytides. *Dermatol. Surg.* 29, 7–13 (2003).

35 Sadick NS, Faacs. Botulinum toxin type B for glabellar wrinkles: a prospective open-label response study. *Dermatol. Surg.* 28, 817–821 (2002).

36 Comella CL, Jankovic J, Shannon KM *et al.* Comparison of botulinum toxin serotypes A and B for the treatment of cervical dystonia. *Neurology* 65, 1423–1429 (2005).

37 Aoki KR. Botulinum neurotoxin serotypes A and B preparations have different safety margins in preclinical models of muscle weakening efficacy and systemic safety. *Toxicon* 40, 923–928 (2002).

38 Dong M, Yeh F, Tepp WH *et al.* SV2 is the protein receptor for botulinum neurotoxin A. *Science* 312, 592–596 (2006).

39 Chen R, Karp BI, Goldstein SR, Bara-Jimenez W, Yaseen Z, Hallett M. Effect of muscle activity immediately after botulinum toxin injection for writer's cramp. *Mov. Disord.* 14, 307–312 (1999).

40 Dressler D, Adib Saberi F. Botulinum toxin: mechanisms of action. *Eur. Neurol.* 53, 3–9 (2005).

•• **Detailed study of the full time course and the development of resistance of the therapeutic effect of botulinum toxin with repeated applications.**

41 Chancellor MB. Ten years single surgeon experience with botulinum toxin in the urinary tract; clinical observations and research discovery. *Int. Urol. Nephrol.* DOI: 10.1007/s11255-009-9600-7 (2009) (Epub ahead of print).

42 Eleopra R, Tugnoli V, Rossetto O, Montecucco C, De Grandis D. Botulinum neurotoxin serotype C: a novel effective botulinum toxin therapy in human. *Neurosci. Lett.* 224, 91–94 (1997).

43 Dolly JO, Aoki KR. The structure and mode of action of different botulinum toxins. *Eur. J. Neurol.* 13(Suppl. 4), 1–9 (2006).

• **Excellent review that contains valuable insights upon the persistance of type A neurotoxin.**

44 Washbourne P, Pellizzari R, Rossetto O *et al.* On the action of botulinum neurotoxins A and E at cholinergic terminals. *J. Physiol. Paris* 92, 135–139 (1998).

45 Greene PE, Fahn S. Use of botulinum toxin type F injections to treat torticollis in patients with immunity to botulinum toxin type A. *Mov. Disord* 8, 479–483 (1993).

46 Matarasso A, Matarasso SL. Botulinum A exotoxin for the management of platysma bands. *Plast. Reconstr. Surg.* 112, 138S–140S (2003).

47 Sadick NS, Matarasso SL. Comparison of botulinum toxins A and B in the treatment of facial rhytides. *Dermatol. Clin.* 22, 221–226 (2004).

• **Important review that provides a comparison of kinetic features of botulinum toxins A and B.**

48 Guyer BM. Some unresolved issues with botulinum toxin. *J. Neurol.* 248(Suppl. 1), 11–13 (2001).

49 Dressler D. *Botulinum Toxin Therapy.* Georg Thieme Verlag, Stuttgart, Germany (2000).

50 Brin MF, Comella CL, Jankovic J, Lai F, Naumann M. Long-term treatment with botulinum toxin type A in cervical dystonia has low immunogenicity by mouse protection assay. *Mov. Disord.* 23, 1353–1360 (2008).

51 Jankovic J, Hunter C, Dolimbek BZ *et al.* Clinico-immunologic aspects of botulinum toxin type B treatment of cervical dystonia. *Neurology* 67, 2233–2235 (2006).

52 Eleopra R, Tugnoli V, Quatrale R, Rossetto O, Montecucco C. Different types of botulinum toxin in humans. *Mov. Disord* 19(Suppl. 8), S53–S59 (2004).

53 Dressler D, Bigalke H. Botulinum toxin type B *de novo* therapy of cervical dystonia: frequency of antibody induced therapy failure. *J. Neurol.* 252, 904–907 (2005).

54 Dressler D. Clinical features of antibody-induced complete secondary failure of botulinum toxin therapy. *Eur. Neurol.* 48, 26–29 (2002).

•• **Contains details on the timing of the development of resitance (complete secondary therapeutic failure) to type B toxin.**

55 de Sa Earp AP, Marmur ES. The five D's of botulinum toxin: doses, dilution, diffusion, duration and dogma. *J. Cosmet. Laser Ther.* 10, 93–102 (2008).

56 Laurent GJ, Millward DJ. Protein turnover during skeletal muscle hypertrophy. *Fed. Proc.* 39, 42–47 (1980).

57 Pearson CM. Histopathological features of muscle in the preclinical stages of muscular dystrophy. *Brain* 85, 109–120 (1962).

58 Lebeda FJ, Albuquerque EX. Membrane cable properties of normal and dystrophic chicken muscle fibers. *Exp. Neurol.* 47, 544–557 (1975).

59 Brin MF. Basic and clinical aspects of BOTOX. *Toxicon* 54, 676–682 (2009).

60 de Paiva A, Meunier FA, Molgo J, Aoki KR, Dolly JO. Functional repair of motor endplates after botulinum neurotoxin type A poisoning: biphasic switch of synaptic activity between nerve sprouts and their parent terminals. *Proc. Natl Acad. Sci. USA* 96, 3200–3205 (1999).

61 Rogozhin AA, Pang KK, Bukharaeva E, Young C, Slater CR. Recovery of mouse neuromuscular junctions from single and repeated injections of botulinum neurotoxin A. *J. Physiol.* 586, 3163–3182 (2008).

62 Tintner R, Jankovic J. Botulinum toxin for the treatment of cervical dystonia. *Expert Opin. Pharmacother.* 2, 1985–1994 (2001).

63 Dolly JO, Williams RS, Black JD, Tse CK, Hambleton P, Melling J. Localization of sites for 125I-labelled botulinum neurotoxin at murine neuromuscular junction and its binding to rat brain synaptosomes. *Toxicon* 20, 141–148 (1982).

64 Amirali A, Sanders I. The glycogen depletion assay and the measurement of botulinum toxin injections In: *Scientific and Therapeutic Aspects of Botulinum Toxin*. Brin, M, Jankovic, J, Hallett, M (Eds). Lippincott Williams & Wilkins, PA, USA 135–141 (2002).

65 Jurasinski CV, Lieth E, Dang Do AN, Schengrund CL. Correlation of cleavage of SNAP-25 with muscle function in a rat model of botulinum neurotoxin type A induced paralysis. *Toxicon* 39, 1309–1315 (2001).

66 Kalandakanond S, Coffield JA. Cleavage of SNAP-25 by botulinum toxin type A requires receptor-mediated endocytosis, pH-dependent translocation, and zinc. *J. Pharmacol. Exp. Ther.* 296, 980–986 (2001).

67 Meunier FA, Lisk G, Sesardic D, Dolly JO. Dynamics of motor nerve terminal remodeling unveiled using SNARE-cleaving botulinum toxins: the extent and duration are dictated by the sites of SNAP-25 truncation. *Mol. Cell. Neurosci.* 22, 454–466 (2003).

68 Chushak Y, Foy BD, Frazier JM. Biomolecular Network Simulator. Software for stochastic simulation of cellular biological processes. In: *Proceedings of the High Performance Computing Symposium (HPC 2007)* Society for Modeling and Simulation International, VA, USA 345–349 (2007).

69 Chushak Y, Foy B, Fazier J. Stochastic simulations of cellular and biological processes. In: *Proceedings of the Users Group*

Conference. Department of Defense High Performance Computing Modernization Program (DoD HPCMP), PA, USA 425–429 (2007).

70 Ditlevsen S, de Gaetano A. Stochastic vs. deterministic uptake of dodecanedioic acid by isolated rat livers. *Bull. Math. Biol.* 67, 547–561 (2005).

71 Gabler NB, Duan N, Liao D, Elmore JG, Ganiats TG, Kravitz RL. Dealing with heterogeneity of treatment effects: is the literature up to the challenge? *Trials* 10, 43 (2009).

72 McConnell P, Dash RC, Chilukuri R *et al.* The cancer translational research informatics platform. *BMC Med. Inform. Decis. Mak.* 8, 60 (2008).

73 Gentleman RC, Carey VJ, Bates DM *et al.* Bioconductor: open software development for computational biology and bioinformatics. *Genome Biol.* 5, R80 (2004).

74 Lowe NJ, Yamauchi PS, Lask GP, Patnaik R, Moore D. Botulinum toxins types A and B for brow furrows: preliminary experiences with type B toxin dosing. *J. Cosmet. Laser Ther.* 4, 15–18 (2002).

75 Sadick NS. Prospective open-label study of botulinum toxin type B (MyoBloc) at doses of 2,400 and 3,000 U for the treatment of glabellar wrinkles. *Dermatol. Surg.* 29, 501–507 (2003).

Websites

101 Martin B. Botulinum toxin: the name game http://bmartinmd.com/2009/08/botulinum-toxin-the-name-game.html (Accessed October 2009)

102 BotDB database http://botdb.abcc.ncifcrf.gov

103 Anonymous. FDA gives update on botulinum toxin safety warnings; established names of drugs changed www.fda.gov/NewsEvents/Newsroom/PressAnnouncements/ucm175013.htm (Accessed October 2009)

104 Allergan. Botox® cosmetic (onabotulinumtoxinA) for injection www.allergan.com/assets/pdf/botox_cosmetic_pi.pdf (2009) (Accessed October 2009)

Affiliations

- Frank J Lebeda
  Combat Casualty Care Research Program, US Army Medical Research and Materiel Command, 504 Scott Street, Ft Detrick, MD 21702-5012, USA
  Tel.: +1 301 619 7569
  Fax: +1 301 619 7067
  frank.lebeda@amedd.army.mil
- Regina Z Cer
  Advanced Biomedical Computing Center, Advanced Technology Program, SAIC-Frederick Inc., NCI-Frederick, Frederick, MD 21702, USA
  Tel.: +1 301 846 5664
  Fax: +1 301 846 5762
  cerr@mail.nih.gov
- Robert M Stephens
  Advanced Biomedical Computing Center, Advanced Technology Program, SAIC-Frederick Inc., NCI-Frederick, Frederick, MD 21702, USA
  Tel.: +1 301 846 5787
  Fax: +1 301 846 5762
  stephensr@mail.nih.gov
- Uma Mudunuri
  Advanced Biomedical Computing Center, Advanced Technology Program, SAIC-Frederick Inc., NCI-Frederick, Frederick, MD 21702, USA
  Tel.: +1 301 846 6774
  Fax: +1 301 846 5762
  mudunuriu@mail.nih.gov